```
!pip install torchmetrics

Collecting torchmetrics
  Downloading torchmetrics-1.4.0.post0-py3-none-any.whl (868 kB)
━━━
```

```
Collecting nvidia-cudnn-cu12==8.9.2.26 (from torch>=1.10.0-
>torchmetrics)
  Using cached nvidia_cudnn_cu12-8.9.2.26-py3-none-
manylinux1_x86_64.whl (731.7 MB)
Collecting nvidia-cublas-cu12==12.1.3.1 (from torch>=1.10.0-
>torchmetrics)
  Using cached nvidia_cublas_cu12-12.1.3.1-py3-none-
manylinux1_x86_64.whl (410.6 MB)
Collecting nvidia-cufft-cu12==11.0.2.54 (from torch>=1.10.0-
>torchmetrics)
  Using cached nvidia_cufft_cu12-11.0.2.54-py3-none-
manylinux1_x86_64.whl (121.6 MB)
Collecting nvidia-curand-cu12==10.3.2.106 (from torch>=1.10.0-
>torchmetrics)
  Using cached nvidia_curand_cu12-10.3.2.106-py3-none-
manylinux1_x86_64.whl (56.5 MB)
Collecting nvidia-cusolver-cu12==11.4.5.107 (from torch>=1.10.0-
>torchmetrics)
  Using cached nvidia_cusolver_cu12-11.4.5.107-py3-none-
manylinux1_x86_64.whl (124.2 MB)
Collecting nvidia-cusparse-cu12==12.1.0.106 (from torch>=1.10.0-
>torchmetrics)
  Using cached nvidia_cusparse_cu12-12.1.0.106-py3-none-
manylinux1_x86_64.whl (196.0 MB)
Collecting nvidia-nccl-cu12==2.20.5 (from torch>=1.10.0->torchmetrics)
  Using cached nvidia_nccl_cu12-2.20.5-py3-none-
manylinux2014_x86_64.whl (176.2 MB)
Collecting nvidia-nvtx-cu12==12.1.105 (from torch>=1.10.0-
>torchmetrics)
  Using cached nvidia_nvtx_cu12-12.1.105-py3-none-
manylinux1_x86_64.whl (99 kB)
Requirement already satisfied: triton==2.3.0 in
/usr/local/lib/python3.10/dist-packages (from torch>=1.10.0-
>torchmetrics) (2.3.0)
Collecting nvidia-nvjitlink-cu12 (from nvidia-cusolver-
cu12==11.4.5.107->torch>=1.10.0->torchmetrics)
  Downloading nvidia_nvjitlink_cu12-12.5.40-py3-none-
manylinux2014_x86_64.whl (21.3 MB)
━━━━━━━━━━━━━━━━━━━━━━━━━━━━━━━━━━━━━━━━ 21.3/21.3 MB 60.2 MB/s eta
0:00:00
ent already satisfied: MarkupSafe>=2.0 in
/usr/local/lib/python3.10/dist-packages (from jinja2->torch>=1.10.0-
>torchmetrics) (2.1.5)
Requirement already satisfied: mpmath>=0.19 in
/usr/local/lib/python3.10/dist-packages (from sympy->torch>=1.10.0-
>torchmetrics) (1.3.0)
Installing collected packages: nvidia-nvtx-cu12, nvidia-nvjitlink-
cu12, nvidia-nccl-cu12, nvidia-curand-cu12, nvidia-cufft-cu12, nvidia-
cuda-runtime-cu12, nvidia-cuda-nvrtc-cu12, nvidia-cuda-cupti-cu12,
```

```
nvidia-cublas-cu12, lightning-utilities, nvidia-cusparse-cu12, nvidia-
cudnn-cu12, nvidia-cusolver-cu12, torchmetrics
Successfully installed lightning-utilities-0.11.2 nvidia-cublas-cu12-
12.1.3.1 nvidia-cuda-cupti-cu12-12.1.105 nvidia-cuda-nvrtc-cu12-
12.1.105 nvidia-cuda-runtime-cu12-12.1.105 nvidia-cudnn-cu12-8.9.2.26
nvidia-cufft-cu12-11.0.2.54 nvidia-curand-cu12-10.3.2.106 nvidia-
cusolver-cu12-11.4.5.107 nvidia-cusparse-cu12-12.1.0.106 nvidia-nccl-
cu12-2.20.5 nvidia-nvjitlink-cu12-12.5.40 nvidia-nvtx-cu12-12.1.105
torchmetrics-1.4.0.post0
```

#Imports

```
import torch
import torch.nn as nn
import torch.optim as optim
from torch.utils.data import TensorDataset, DataLoader, random_split
import torch.backends.cudnn as cudnn

import torchvision
from torchvision import transforms as T

from sklearn.model_selection import train_test_split
import matplotlib.pyplot as plt
import numpy as np
import pandas as pd

from torchmetrics import Accuracy
from tqdm import tqdm

import glob
```

#Dataset

Load Dataset

```
!cp '/content/drive/MyDrive/colab_projects/Recurrent Neural
Network/UCI HAR Dataset.zip' /content

!unzip '/content/UCI HAR Dataset.zip'
```

```
Archive:  /content/UCI HAR Dataset.zip
   creating: UCI HAR Dataset/
  inflating: UCI HAR Dataset/.DS_Store
   creating: __MACOSX/
   creating: __MACOSX/UCI HAR Dataset/
  inflating: __MACOSX/UCI HAR Dataset/._.DS_Store
  inflating: UCI HAR Dataset/activity_labels.txt
  inflating: __MACOSX/UCI HAR Dataset/._activity_labels.txt
```

```
  inflating: UCI HAR Dataset/features.txt
  inflating: __MACOSX/UCI HAR Dataset/._features.txt
  inflating: UCI HAR Dataset/features_info.txt
  inflating: __MACOSX/UCI HAR Dataset/._features_info.txt
  inflating: UCI HAR Dataset/README.txt
  inflating: __MACOSX/UCI HAR Dataset/._README.txt
   creating: UCI HAR Dataset/test/
   creating: UCI HAR Dataset/test/Inertial Signals/
  inflating: UCI HAR Dataset/test/Inertial Signals/body_acc_x_test.txt

   creating: __MACOSX/UCI HAR Dataset/test/
   creating: __MACOSX/UCI HAR Dataset/test/Inertial Signals/
  inflating: __MACOSX/UCI HAR Dataset/test/Inertial
Signals/._body_acc_x_test.txt
  inflating: UCI HAR Dataset/test/Inertial Signals/body_acc_y_test.txt

  inflating: __MACOSX/UCI HAR Dataset/test/Inertial
Signals/._body_acc_y_test.txt
  inflating: UCI HAR Dataset/test/Inertial Signals/body_acc_z_test.txt

  inflating: __MACOSX/UCI HAR Dataset/test/Inertial
Signals/._body_acc_z_test.txt
  inflating: UCI HAR Dataset/test/Inertial
Signals/body_gyro_x_test.txt
  inflating: __MACOSX/UCI HAR Dataset/test/Inertial
Signals/._body_gyro_x_test.txt
  inflating: UCI HAR Dataset/test/Inertial
Signals/body_gyro_y_test.txt
  inflating: __MACOSX/UCI HAR Dataset/test/Inertial
Signals/._body_gyro_y_test.txt
  inflating: UCI HAR Dataset/test/Inertial
Signals/body_gyro_z_test.txt
  inflating: __MACOSX/UCI HAR Dataset/test/Inertial
Signals/._body_gyro_z_test.txt
  inflating: UCI HAR Dataset/test/Inertial
Signals/total_acc_x_test.txt
  inflating: __MACOSX/UCI HAR Dataset/test/Inertial
Signals/._total_acc_x_test.txt
  inflating: UCI HAR Dataset/test/Inertial
Signals/total_acc_y_test.txt
  inflating: __MACOSX/UCI HAR Dataset/test/Inertial
Signals/._total_acc_y_test.txt
  inflating: UCI HAR Dataset/test/Inertial
Signals/total_acc_z_test.txt
  inflating: __MACOSX/UCI HAR Dataset/test/Inertial
Signals/._total_acc_z_test.txt
  inflating: __MACOSX/UCI HAR Dataset/test/._Inertial Signals
  inflating: UCI HAR Dataset/test/subject_test.txt
  inflating: __MACOSX/UCI HAR Dataset/test/._subject_test.txt
  inflating: UCI HAR Dataset/test/X_test.txt
```

```
  inflating: __MACOSX/UCI HAR Dataset/test/._X_test.txt
  inflating: UCI HAR Dataset/test/y_test.txt
  inflating: __MACOSX/UCI HAR Dataset/test/._y_test.txt
  inflating: __MACOSX/UCI HAR Dataset/._test
   creating: UCI HAR Dataset/train/
   creating: UCI HAR Dataset/train/Inertial Signals/
  inflating: UCI HAR Dataset/train/Inertial
Signals/body_acc_x_train.txt
   creating: __MACOSX/UCI HAR Dataset/train/
   creating: __MACOSX/UCI HAR Dataset/train/Inertial Signals/
  inflating: __MACOSX/UCI HAR Dataset/train/Inertial
Signals/._body_acc_x_train.txt
  inflating: UCI HAR Dataset/train/Inertial
Signals/body_acc_y_train.txt
  inflating: __MACOSX/UCI HAR Dataset/train/Inertial
Signals/._body_acc_y_train.txt
  inflating: UCI HAR Dataset/train/Inertial
Signals/body_acc_z_train.txt
  inflating: __MACOSX/UCI HAR Dataset/train/Inertial
Signals/._body_acc_z_train.txt
  inflating: UCI HAR Dataset/train/Inertial
Signals/body_gyro_x_train.txt
  inflating: __MACOSX/UCI HAR Dataset/train/Inertial
Signals/._body_gyro_x_train.txt
  inflating: UCI HAR Dataset/train/Inertial
Signals/body_gyro_y_train.txt
  inflating: __MACOSX/UCI HAR Dataset/train/Inertial
Signals/._body_gyro_y_train.txt
  inflating: UCI HAR Dataset/train/Inertial
Signals/body_gyro_z_train.txt
  inflating: __MACOSX/UCI HAR Dataset/train/Inertial
Signals/._body_gyro_z_train.txt
  inflating: UCI HAR Dataset/train/Inertial
Signals/total_acc_x_train.txt
  inflating: __MACOSX/UCI HAR Dataset/train/Inertial
Signals/._total_acc_x_train.txt
  inflating: UCI HAR Dataset/train/Inertial
Signals/total_acc_y_train.txt
  inflating: __MACOSX/UCI HAR Dataset/train/Inertial
Signals/._total_acc_y_train.txt
  inflating: UCI HAR Dataset/train/Inertial
Signals/total_acc_z_train.txt
  inflating: __MACOSX/UCI HAR Dataset/train/Inertial
Signals/._total_acc_z_train.txt
  inflating: __MACOSX/UCI HAR Dataset/train/._Inertial Signals
  inflating: UCI HAR Dataset/train/subject_train.txt
  inflating: __MACOSX/UCI HAR Dataset/train/._subject_train.txt
  inflating: UCI HAR Dataset/train/X_train.txt
  inflating: __MACOSX/UCI HAR Dataset/train/._X_train.txt
```

```
  inflating: UCI HAR Dataset/train/y_train.txt
  inflating: __MACOSX/UCI HAR Dataset/train/._y_train.txt
  inflating: __MACOSX/UCI HAR Dataset/._train
  inflating: __MACOSX/._UCI HAR Dataset
```

```
def har_dataset(phase):
  x = []
  data_dir = f'/content/UCI HAR Dataset/{phase}/Inertial Signals/*'
  for file_dir in glob.glob(data_dir):
    x.append(np.loadtxt(file_dir))
  y = np.loadtxt(f'/content/UCI HAR Dataset/{phase}/y_{phase}.txt')
  #
  x = torch.FloatTensor(x).permute(1, 2, 0)
  y = torch.LongTensor(y) - 1
  return x, y

x_train, y_train = har_dataset('train')
x_test, y_test = har_dataset('test')
```

```
<ipython-input-11-cdf4b59997ec>:8: UserWarning: Creating a tensor from
a list of numpy.ndarrays is extremely slow. Please consider converting
the list to a single numpy.ndarray with numpy.array() before
converting to a tensor. (Triggered internally at
../torch/csrc/utils/tensor_new.cpp:274.)
  x = torch.FloatTensor(x).permute(1, 2, 0)
```

Convert to Tensor

```
train_set = TensorDataset(x_train, y_train)
test_set = TensorDataset(x_test, y_test)

train_set, test_set = random_split(train_set, (5000, x_train.shape[0]-
5000))
```

DataLoader

```
train_loader = DataLoader(train_set, batch_size=64, shuffle=True)
test_loader = DataLoader(test_set, batch_size=128, shuffle=False)

x, y = next(iter(train_loader))
print(x.shape)
print(y.shape)
```

```
torch.Size([64, 128, 9])
torch.Size([64])
```

Model

```
model = nn.Sequential(nn.RNN(input_size=9, hidden_size=32,
num_layers=4,
                             nonlinearity='tanh', bias=True,
batch_first=True, dropout=0.,
                             bidirectional=True),
                       nn.Linear(64, 6))
```

#LSTM Model (from scratch)

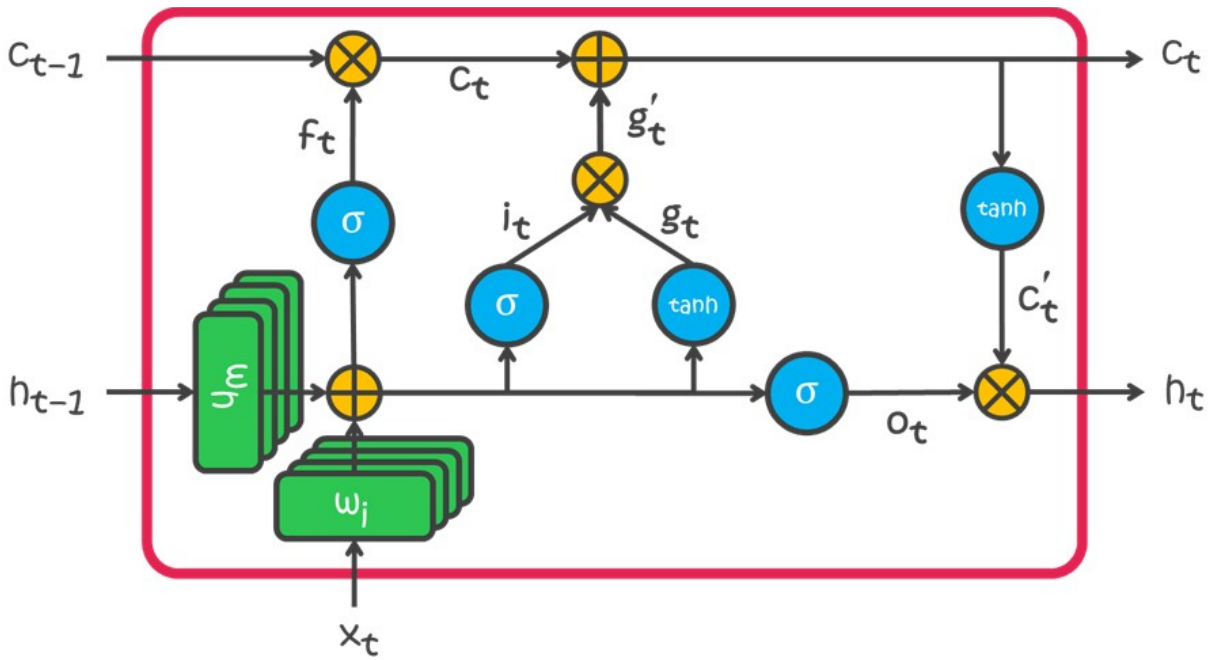


```
class Gate(nn.Module):

  def __init__(self, hidden_size, af):
    super().__init__()
    self.fch = nn.LazyLinear(hidden_size)
    self.fcx = nn.LazyLinear(hidden_size)
    self.af = nn.Sigmoid() if af == 'sigmoid' else nn.Tanh()

  def forward(self, x, h):
    return self.af(self.fcx(x) + self.fch(h))

class LSTM(nn.Module):

  def __init__(self, hidden_size):
    super().__init__()
    self.hidden_size = hidden_size
    self.forget_gate = Gate(hidden_size, 'sigmoid')
    self.input_gate = Gate(hidden_size, 'sigmoid')
```

```
    self.output_gate = Gate(hidden_size, 'sigmoid')
    self.gate = Gate(hidden_size, 'tanh')

  def forward(self, x):
    ht = torch.zeros(self.hidden_size)
    ct = torch.zeros(self.hidden_size)
    output = []
    #
    for t in range(L): #BSxLxF
      xt = x[:, t, F]
      ft = self.forget_gate(xt, ht)
      ct = ct * ft
      #
      gt = self.gate(xt, ht)
      it = self.input_gate(xt, ht)
      ct = ct + gt * it
      #
      ot = self.output_gate(xt, ht)
      ht = ot * torch.tanh(ct)
      output.append(ht)
    return output, ht, ct
```

#Device

In PyTorch, .to(device) is used to move tensors or models to a specific device, which can be either a CPU or a GPU. This is necessary because operations involving tensors need to be performed on the same device. For example, if your model is on a GPU, your input tensors also need to be on the GPU to enable the model to perform computations on them.

```
device = 'cuda' if torch.cuda.is_available() else 'cpu'
device

{"type":"string"}
```

#Utils

```
class AverageMeter(object):
    """Computes and stores the average and current value"""
    def __init__(self):
        self.reset()

    def reset(self):
        self.val = 0
        self.avg = 0
        self.sum = 0
        self.count = 0

    def update(self, val, n=1):
        self.val = val
```

```
        self.sum += val * n
        self.count += n
        self.avg = self.sum / self.count
```

#Functions

```
def train_one_epoch(model, train_loader, loss_fn, optimizer,
epoch=None):
  model.train()
  loss_train = AverageMeter()
  acc_train = Accuracy(task='multiclass', num_classes=6).to(device)
  with tqdm(train_loader, unit="batch") as tepoch:
    for inputs, targets in tepoch:
      if epoch is not None:
        tepoch.set_description(f"Epoch {epoch}")
      inputs = inputs.to(device)
      targets = targets.to(device)

      outputs = model(inputs)

      loss = loss_fn(outputs, targets)

      loss.backward()
      torch.nn.utils.clip_grad_norm_(model.parameters(), 0.5)

      optimizer.step()
      optimizer.zero_grad()

      loss_train.update(loss.item())
      acc_train(outputs, targets.int())
      tepoch.set_postfix(loss=loss_train.avg,
                         accuracy=100.*acc_train.compute().item())
  return model, loss_train.avg, acc_train.compute().item()

def validation(model, test_loader, loss_fn):
  model.eval()
  with torch.no_grad():
    loss_valid = AverageMeter()
    acc_valid = Accuracy(task='multiclass', num_classes=6).to(device)
    for i, (inputs, targets) in enumerate(test_loader):
      inputs = inputs.to(device)
      targets = targets.to(device)

      outputs = model(inputs)
      loss = loss_fn(outputs, targets)

      loss_valid.update(loss.item())
      acc_valid(outputs, targets.int())
  return loss_valid.avg, acc_valid.compute().item()
```

#Model

```
class RNNModel(nn.Module):
  def __init__(self, RNN, input_size, hidden_size, num_layers,
bidirectional, num_cls):
    super().__init__()
    self.rnn = RNN(input_size=input_size,
                      hidden_size=hidden_size,
                      num_layers=num_layers,
                      bidirectional=bidirectional,
                      batch_first=True)
    self.fc = nn.LazyLinear(num_cls)

  def forward(self, x):
    outputs, _ = self.rnn(x)
    y = self.fc(outputs) # out: many[:, -1, :]
    y = y.mean(dim=1)
    return y

model = RNNModel(nn.LSTM, 9, 32, 1, False, 6)
model
```

```
RNNModel(
  (rnn): LSTM(9, 32, batch_first=True)
  (fc): LazyLinear(in_features=0, out_features=6, bias=True)
)
```

#Setting Hyperparameters Efficiently

Check Forward Path

```
model = RNNModel(nn.LSTM, 9, 128, 1, False, 6).to(device)
loss_fn = nn.CrossEntropyLoss()

x_batch, y_batch = next(iter(train_loader))
outputs = model(x_batch.to(device))
loss = loss_fn(outputs, y_batch.to(device))
print(loss)
```

```
/usr/local/lib/python3.10/dist-packages/torch/nn/modules/lazy.py:181:
UserWarning: Lazy modules are a new feature under heavy development so
changes to the API or functionality can happen at any moment.
  warnings.warn('Lazy modules are a new feature under heavy
development '
```

```
tensor(1.7805, grad_fn=<NllLossBackward0>)
```

Check Backward Path

```
_, mini_train_dataset = random_split(train_set, (len(train_set)-500,
500))
mini_train_loader = DataLoader(mini_train_dataset, 20)

model = RNNModel(nn.LSTM, 9, 128, 1, False, 6).to(device)
loss_fn = nn.CrossEntropyLoss()
```

```
/usr/local/lib/python3.10/dist-packages/torch/nn/modules/lazy.py:181:
UserWarning: Lazy modules are a new feature under heavy development so
changes to the API or functionality can happen at any moment.
  warnings.warn('Lazy modules are a new feature under heavy
development '
```

```
optimizer = optim.SGD(model.parameters(), lr=0.1)

num_epochs = 100
for epoch in range(num_epochs):
  model, _, _ = train_one_epoch(model, mini_train_loader, loss_fn,
optimizer, epoch)
```

```
Epoch 0: 100%|██████████| 25/25 [00:01<00:00, 15.98batch/s,
accuracy=27.2, loss=1.78]
Epoch 1: 100%|██████████| 25/25 [00:01<00:00, 13.79batch/s,
accuracy=31.8, loss=1.76]
Epoch 2: 100%|██████████| 25/25 [00:02<00:00, 11.10batch/s,
accuracy=33.6, loss=1.73]
Epoch 3: 100%|██████████| 25/25 [00:02<00:00,  9.25batch/s,
accuracy=37.6, loss=1.68]
Epoch 4: 100%|██████████| 25/25 [00:02<00:00, 10.33batch/s,
accuracy=41.4, loss=1.59]
Epoch 5: 100%|██████████| 25/25 [00:02<00:00, 11.25batch/s,
accuracy=39.8, loss=1.46]
Epoch 6: 100%|██████████| 25/25 [00:01<00:00, 15.15batch/s,
accuracy=38.8, loss=1.39]
Epoch 7: 100%|██████████| 25/25 [00:01<00:00, 16.72batch/s,
accuracy=39.6, loss=1.36]
Epoch 8: 100%|██████████| 25/25 [00:01<00:00, 16.60batch/s,
accuracy=41.2, loss=1.34]
Epoch 9: 100%|██████████| 25/25 [00:01<00:00, 16.49batch/s,
accuracy=43, loss=1.31]
Epoch 10: 100%|██████████| 25/25 [00:01<00:00, 16.24batch/s,
accuracy=45.4, loss=1.27]
Epoch 11: 100%|██████████| 25/25 [00:01<00:00, 16.72batch/s,
accuracy=45.2, loss=1.22]
Epoch 12: 100%|██████████| 25/25 [00:01<00:00, 15.06batch/s,
accuracy=49.2, loss=1.19]
Epoch 13: 100%|██████████| 25/25 [00:02<00:00, 11.66batch/s,
accuracy=50.4, loss=1.17]
Epoch 14: 100%|██████████| 25/25 [00:02<00:00,  9.01batch/s,
```

```
accuracy=50, loss=1.15]
Epoch 15: 100%|██████████| 25/25 [00:02<00:00, 10.35batch/s,
accuracy=49.6, loss=1.14]
Epoch 16: 100%|██████████| 25/25 [00:02<00:00, 11.26batch/s,
accuracy=51.2, loss=1.13]
Epoch 17: 100%|██████████| 25/25 [00:01<00:00, 16.61batch/s,
accuracy=51.2, loss=1.12]
Epoch 18: 100%|██████████| 25/25 [00:01<00:00, 16.28batch/s,
accuracy=52.2, loss=1.11]
Epoch 19: 100%|██████████| 25/25 [00:01<00:00, 15.71batch/s,
accuracy=51.8, loss=1.1]
Epoch 20: 100%|██████████| 25/25 [00:01<00:00, 15.68batch/s,
accuracy=52.8, loss=1.09]
Epoch 21: 100%|██████████| 25/25 [00:02<00:00, 11.63batch/s,
accuracy=53.6, loss=1.08]
Epoch 22: 100%|██████████| 25/25 [00:02<00:00, 11.44batch/s,
accuracy=53.2, loss=1.07]
Epoch 23: 100%|██████████| 25/25 [00:02<00:00, 12.19batch/s,
accuracy=53, loss=1.06]
Epoch 24: 100%|██████████| 25/25 [00:01<00:00, 16.29batch/s,
accuracy=54.6, loss=1.05]
Epoch 25: 100%|██████████| 25/25 [00:01<00:00, 16.58batch/s,
accuracy=53.2, loss=1.05]
Epoch 26: 100%|██████████| 25/25 [00:01<00:00, 15.93batch/s,
accuracy=52.8, loss=1.05]
Epoch 27: 100%|██████████| 25/25 [00:01<00:00, 15.88batch/s,
accuracy=52.2, loss=1.04]
Epoch 28: 100%|██████████| 25/25 [00:01<00:00, 16.85batch/s,
accuracy=53.6, loss=1.03]
Epoch 29: 100%|██████████| 25/25 [00:02<00:00, 11.46batch/s,
accuracy=54.2, loss=1.04]
Epoch 30: 100%|██████████| 25/25 [00:03<00:00,  6.66batch/s,
accuracy=52.8, loss=1.02]
Epoch 31: 100%|██████████| 25/25 [00:02<00:00, 11.30batch/s,
accuracy=54.6, loss=1.02]
Epoch 32: 100%|██████████| 25/25 [00:01<00:00, 12.95batch/s,
accuracy=53.6, loss=1.01]
Epoch 33: 100%|██████████| 25/25 [00:01<00:00, 16.02batch/s,
accuracy=53.2, loss=1.01]
Epoch 34: 100%|██████████| 25/25 [00:01<00:00, 16.32batch/s,
accuracy=53.6, loss=1.01]
Epoch 35: 100%|██████████| 25/25 [00:01<00:00, 16.11batch/s,
accuracy=54.6, loss=0.999]
Epoch 36: 100%|██████████| 25/25 [00:01<00:00, 15.60batch/s,
accuracy=55.2, loss=1.01]
Epoch 37: 100%|██████████| 25/25 [00:01<00:00, 16.16batch/s,
accuracy=55.6, loss=1]
Epoch 38: 100%|██████████| 25/25 [00:01<00:00, 14.42batch/s,
accuracy=55.2, loss=1]
```

```
Epoch 39: 100%|██████████| 25/25 [00:02<00:00, 11.27batch/s,
accuracy=56.4, loss=0.985]
Epoch 40: 100%|██████████| 25/25 [00:02<00:00, 12.03batch/s,
accuracy=55.6, loss=1]
Epoch 41: 100%|██████████| 25/25 [00:01<00:00, 12.95batch/s,
accuracy=55.4, loss=0.978]
Epoch 42: 100%|██████████| 25/25 [00:01<00:00, 15.61batch/s,
accuracy=55.6, loss=0.976]
Epoch 43: 100%|██████████| 25/25 [00:01<00:00, 16.19batch/s,
accuracy=55, loss=0.983]
Epoch 44: 100%|██████████| 25/25 [00:01<00:00, 16.29batch/s,
accuracy=56.4, loss=0.969]
Epoch 45: 100%|██████████| 25/25 [00:01<00:00, 16.29batch/s,
accuracy=57.6, loss=0.958]
Epoch 46: 100%|██████████| 25/25 [00:01<00:00, 15.77batch/s,
accuracy=56.6, loss=0.962]
Epoch 47: 100%|██████████| 25/25 [00:01<00:00, 14.93batch/s,
accuracy=54.4, loss=0.978]
Epoch 48: 100%|██████████| 25/25 [00:03<00:00,  7.14batch/s,
accuracy=56.6, loss=0.985]
Epoch 49: 100%|██████████| 25/25 [00:02<00:00, 11.25batch/s,
accuracy=57.4, loss=0.963]
Epoch 50: 100%|██████████| 25/25 [00:01<00:00, 16.09batch/s,
accuracy=56.2, loss=0.969]
Epoch 51: 100%|██████████| 25/25 [00:01<00:00, 15.97batch/s,
accuracy=56.6, loss=0.955]
Epoch 52: 100%|██████████| 25/25 [00:01<00:00, 15.66batch/s,
accuracy=56.8, loss=0.962]
Epoch 53: 100%|██████████| 25/25 [00:01<00:00, 15.57batch/s,
accuracy=56.8, loss=0.975]
Epoch 54: 100%|██████████| 25/25 [00:01<00:00, 15.61batch/s,
accuracy=57, loss=0.938]
Epoch 55: 100%|██████████| 25/25 [00:01<00:00, 16.42batch/s,
accuracy=59, loss=0.964]
Epoch 56: 100%|██████████| 25/25 [00:02<00:00, 11.70batch/s,
accuracy=57.4, loss=0.949]
Epoch 57: 100%|██████████| 25/25 [00:02<00:00, 11.13batch/s,
accuracy=57.2, loss=0.967]
Epoch 58: 100%|██████████| 25/25 [00:02<00:00,  9.83batch/s,
accuracy=58.8, loss=0.935]
Epoch 59: 100%|██████████| 25/25 [00:02<00:00, 10.63batch/s,
accuracy=57, loss=0.95]
Epoch 60: 100%|██████████| 25/25 [00:02<00:00, 10.66batch/s,
accuracy=57.8, loss=0.94]
Epoch 61: 100%|██████████| 25/25 [00:01<00:00, 15.50batch/s,
accuracy=58, loss=0.928]
Epoch 62: 100%|██████████| 25/25 [00:01<00:00, 15.86batch/s,
accuracy=57.2, loss=0.94]
Epoch 63: 100%|██████████| 25/25 [00:01<00:00, 16.13batch/s,
```

```
accuracy=59.2, loss=0.931]
Epoch 64: 100%|██████████| 25/25 [00:01<00:00, 15.58batch/s,
accuracy=58.4, loss=0.946]
Epoch 65: 100%|██████████| 25/25 [00:02<00:00, 11.33batch/s,
accuracy=60, loss=0.929]
Epoch 66: 100%|██████████| 25/25 [00:02<00:00, 11.23batch/s,
accuracy=57.4, loss=0.921]
Epoch 67: 100%|██████████| 25/25 [00:02<00:00, 12.00batch/s,
accuracy=57.4, loss=0.924]
Epoch 68: 100%|██████████| 25/25 [00:01<00:00, 16.46batch/s,
accuracy=59.4, loss=0.932]
Epoch 69: 100%|██████████| 25/25 [00:01<00:00, 15.43batch/s,
accuracy=59, loss=0.919]
Epoch 70: 100%|██████████| 25/25 [00:01<00:00, 15.60batch/s,
accuracy=59.2, loss=0.914]
Epoch 71: 100%|██████████| 25/25 [00:01<00:00, 15.90batch/s,
accuracy=59.4, loss=0.907]
Epoch 72: 100%|██████████| 25/25 [00:01<00:00, 15.79batch/s,
accuracy=59.4, loss=0.917]
Epoch 73: 100%|██████████| 25/25 [00:02<00:00, 10.65batch/s,
accuracy=59.6, loss=0.911]
Epoch 74: 100%|██████████| 25/25 [00:02<00:00, 11.70batch/s,
accuracy=58, loss=0.917]
Epoch 75: 100%|██████████| 25/25 [00:02<00:00, 11.47batch/s,
accuracy=58.8, loss=0.902]
Epoch 76: 100%|██████████| 25/25 [00:01<00:00, 13.87batch/s,
accuracy=59.6, loss=0.891]
Epoch 77: 100%|██████████| 25/25 [00:01<00:00, 15.95batch/s,
accuracy=58.2, loss=0.901]
Epoch 78: 100%|██████████| 25/25 [00:01<00:00, 12.68batch/s,
accuracy=58, loss=0.912]
Epoch 79: 100%|██████████| 25/25 [00:01<00:00, 15.49batch/s,
accuracy=58, loss=0.893]
Epoch 80: 100%|██████████| 25/25 [00:01<00:00, 16.29batch/s,
accuracy=60.4, loss=0.868]
Epoch 81: 100%|██████████| 25/25 [00:01<00:00, 15.43batch/s,
accuracy=58.8, loss=0.884]
Epoch 82: 100%|██████████| 25/25 [00:02<00:00, 12.22batch/s,
accuracy=58.4, loss=0.897]
Epoch 83: 100%|██████████| 25/25 [00:02<00:00, 11.84batch/s,
accuracy=60.2, loss=0.863]
Epoch 84: 100%|██████████| 25/25 [00:02<00:00, 10.79batch/s,
accuracy=60.8, loss=0.864]
Epoch 85: 100%|██████████| 25/25 [00:01<00:00, 15.14batch/s,
accuracy=59.6, loss=0.854]
Epoch 86: 100%|██████████| 25/25 [00:01<00:00, 15.70batch/s,
accuracy=59.2, loss=0.866]
Epoch 87: 100%|██████████| 25/25 [00:01<00:00, 15.44batch/s,
accuracy=59.4, loss=0.878]
```

```
Epoch 88: 100%|██████████| 25/25 [00:01<00:00, 15.33batch/s,
accuracy=61.8, loss=0.831]
Epoch 89: 100%|██████████| 25/25 [00:01<00:00, 16.22batch/s,
accuracy=58.4, loss=0.865]
Epoch 90: 100%|██████████| 25/25 [00:01<00:00, 15.12batch/s,
accuracy=61.4, loss=0.814]
Epoch 91: 100%|██████████| 25/25 [00:01<00:00, 12.52batch/s,
accuracy=61.2, loss=0.796]
Epoch 92: 100%|██████████| 25/25 [00:02<00:00, 12.02batch/s,
accuracy=64.8, loss=0.819]
Epoch 93: 100%|██████████| 25/25 [00:02<00:00, 10.81batch/s,
accuracy=65, loss=0.797]
Epoch 94: 100%|██████████| 25/25 [00:01<00:00, 14.60batch/s,
accuracy=63.6, loss=0.804]
Epoch 95: 100%|██████████| 25/25 [00:01<00:00, 16.24batch/s,
accuracy=63.8, loss=0.779]
Epoch 96: 100%|██████████| 25/25 [00:01<00:00, 15.08batch/s,
accuracy=62.8, loss=0.77]
Epoch 97: 100%|██████████| 25/25 [00:01<00:00, 15.30batch/s,
accuracy=64.8, loss=0.764]
Epoch 98: 100%|██████████| 25/25 [00:01<00:00, 16.12batch/s,
accuracy=67, loss=0.74]
Epoch 99: 100%|██████████| 25/25 [00:01<00:00, 16.15batch/s,
accuracy=68.6, loss=0.737]
```

Setting Learning Rate and Weight Decay

```
num_epochs = 5

for lr in [0.08, 0.09, 0.1, 0.15, 0.2]:
  for wd in [1e-4, 1e-5, 0.]:
    model = RNNModel(nn.LSTM, 9, 128, 1, True, 6).to(device)
    optimizer = optim.SGD(model.parameters(), lr=lr, weight_decay=wd)
    print(f'LR={lr}, WD={wd}')

    for epoch in range(num_epochs):
      model, loss, _ = train_one_epoch(model, train_loader, loss_fn,
optimizer, epoch)
    print()
```

```
/usr/local/lib/python3.10/dist-packages/torch/nn/modules/lazy.py:181:
UserWarning: Lazy modules are a new feature under heavy development so
changes to the API or functionality can happen at any moment.
  warnings.warn('Lazy modules are a new feature under heavy
development '

LR=0.08, WD=0.0001

Epoch 0: 100%|██████████| 79/79 [00:33<00:00,  2.37batch/s,
accuracy=35.5, loss=1.74]
```

```
Epoch 1: 100%|██████████| 79/79 [00:32<00:00,  2.42batch/s,
accuracy=41.4, loss=1.57]
Epoch 2: 100%|██████████| 79/79 [00:33<00:00,  2.35batch/s,
accuracy=42.6, loss=1.35]
Epoch 3: 100%|██████████| 79/79 [00:32<00:00,  2.43batch/s,
accuracy=47.3, loss=1.25]
Epoch 4: 100%|██████████| 79/79 [00:32<00:00,  2.44batch/s,
accuracy=50.8, loss=1.15]
```

LR=0.08, WD=1e-05

```
Epoch 0: 100%|██████████| 79/79 [00:32<00:00,  2.43batch/s,
accuracy=33.4, loss=1.74]
Epoch 1: 100%|██████████| 79/79 [00:33<00:00,  2.37batch/s,
accuracy=43.8, loss=1.56]
Epoch 2: 100%|██████████| 79/79 [00:32<00:00,  2.40batch/s,
accuracy=42.6, loss=1.35]
Epoch 3: 100%|██████████| 79/79 [00:34<00:00,  2.31batch/s,
accuracy=46.7, loss=1.24]
Epoch 4: 100%|██████████| 79/79 [00:31<00:00,  2.47batch/s,
accuracy=51.2, loss=1.15]
```

LR=0.08, WD=0.0

```
Epoch 0: 100%|██████████| 79/79 [00:32<00:00,  2.46batch/s,
accuracy=35.4, loss=1.74]
Epoch 1: 100%|██████████| 79/79 [00:31<00:00,  2.48batch/s,
accuracy=42.8, loss=1.56]
Epoch 2: 100%|██████████| 79/79 [00:32<00:00,  2.46batch/s,
accuracy=42.2, loss=1.35]
Epoch 3: 100%|██████████| 79/79 [00:34<00:00,  2.30batch/s,
accuracy=46.8, loss=1.27]
Epoch 4: 100%|██████████| 79/79 [00:38<00:00,  2.07batch/s,
accuracy=49, loss=1.19]
```

LR=0.09, WD=0.0001

```
Epoch 0: 100%|██████████| 79/79 [00:32<00:00,  2.44batch/s,
accuracy=34.2, loss=1.73]
Epoch 1: 100%|██████████| 79/79 [00:32<00:00,  2.45batch/s,
accuracy=39.9, loss=1.49]
Epoch 2: 100%|██████████| 79/79 [00:32<00:00,  2.44batch/s,
accuracy=44.1, loss=1.31]
Epoch 3: 100%|██████████| 79/79 [00:34<00:00,  2.30batch/s,
accuracy=48.3, loss=1.21]
Epoch 4: 100%|██████████| 79/79 [00:33<00:00,  2.38batch/s,
accuracy=51.8, loss=1.1]
```

```
LR=0.09, WD=1e-05

Epoch 0: 100%|██████████| 79/79 [00:32<00:00,  2.42batch/s,
accuracy=34.4, loss=1.73]
Epoch 1: 100%|██████████| 79/79 [00:32<00:00,  2.44batch/s,
accuracy=41, loss=1.51]
Epoch 2: 100%|██████████| 79/79 [00:32<00:00,  2.44batch/s,
accuracy=43.1, loss=1.32]
Epoch 3: 100%|██████████| 79/79 [00:32<00:00,  2.45batch/s,
accuracy=48.9, loss=1.21]
Epoch 4: 100%|██████████| 79/79 [00:34<00:00,  2.30batch/s,
accuracy=51.7, loss=1.12]


LR=0.09, WD=0.0

Epoch 0: 100%|██████████| 79/79 [00:32<00:00,  2.44batch/s,
accuracy=36.3, loss=1.72]
Epoch 1: 100%|██████████| 79/79 [00:33<00:00,  2.36batch/s,
accuracy=41.8, loss=1.47]
Epoch 2: 100%|██████████| 79/79 [00:33<00:00,  2.38batch/s,
accuracy=45.1, loss=1.29]
Epoch 3: 100%|██████████| 79/79 [00:32<00:00,  2.42batch/s,
accuracy=48.9, loss=1.2]
Epoch 4: 100%|██████████| 79/79 [00:34<00:00,  2.30batch/s,
accuracy=52.4, loss=1.11]


LR=0.1, WD=0.0001

Epoch 0: 100%|██████████| 79/79 [00:32<00:00,  2.43batch/s,
accuracy=33, loss=1.73]
Epoch 1: 100%|██████████| 79/79 [00:32<00:00,  2.43batch/s,
accuracy=41.1, loss=1.48]
Epoch 2: 100%|██████████| 79/79 [00:36<00:00,  2.16batch/s,
accuracy=45.4, loss=1.29]
Epoch 3: 100%|██████████| 79/79 [00:35<00:00,  2.23batch/s,
accuracy=50, loss=1.15]
Epoch 4: 100%|██████████| 79/79 [00:34<00:00,  2.30batch/s,
accuracy=52, loss=1.09]


LR=0.1, WD=1e-05

Epoch 0: 100%|██████████| 79/79 [00:32<00:00,  2.44batch/s,
accuracy=35.4, loss=1.72]
Epoch 1: 100%|██████████| 79/79 [00:32<00:00,  2.44batch/s,
accuracy=39.4, loss=1.48]
Epoch 2: 100%|██████████| 79/79 [00:32<00:00,  2.42batch/s,
accuracy=45.5, loss=1.28]
```

```
Epoch 3: 100%|██████████| 79/79 [00:33<00:00,  2.37batch/s,
accuracy=49.6, loss=1.16]
Epoch 4: 100%|██████████| 79/79 [00:34<00:00,  2.27batch/s,
accuracy=50.3, loss=1.09]


LR=0.1, WD=0.0

Epoch 0: 100%|██████████| 79/79 [00:33<00:00,  2.39batch/s,
accuracy=32.2, loss=1.72]
Epoch 1: 100%|██████████| 79/79 [00:32<00:00,  2.41batch/s,
accuracy=40.9, loss=1.48]
Epoch 2: 100%|██████████| 79/79 [00:32<00:00,  2.42batch/s,
accuracy=45.2, loss=1.28]
Epoch 3: 100%|██████████| 79/79 [00:32<00:00,  2.43batch/s,
accuracy=50.9, loss=1.15]
Epoch 4: 100%|██████████| 79/79 [00:32<00:00,  2.43batch/s,
accuracy=51.3, loss=1.09]


LR=0.15, WD=0.0001

Epoch 0: 100%|██████████| 79/79 [00:35<00:00,  2.23batch/s,
accuracy=38.6, loss=1.65]
Epoch 1: 100%|██████████| 79/79 [00:32<00:00,  2.41batch/s,
accuracy=44, loss=1.31]
Epoch 2: 100%|██████████| 79/79 [00:32<00:00,  2.43batch/s,
accuracy=49.6, loss=1.16]
Epoch 3: 100%|██████████| 79/79 [00:32<00:00,  2.42batch/s,
accuracy=51.8, loss=1.08]
Epoch 4: 100%|██████████| 79/79 [00:32<00:00,  2.42batch/s,
accuracy=52.2, loss=1.05]


LR=0.15, WD=1e-05

Epoch 0: 100%|██████████| 79/79 [00:34<00:00,  2.26batch/s,
accuracy=36.6, loss=1.65]
Epoch 1: 100%|██████████| 79/79 [00:39<00:00,  2.01batch/s,
accuracy=43.7, loss=1.32]
Epoch 2: 100%|██████████| 79/79 [00:32<00:00,  2.43batch/s,
accuracy=49.8, loss=1.18]
Epoch 3: 100%|██████████| 79/79 [00:32<00:00,  2.43batch/s,
accuracy=51.7, loss=1.08]
Epoch 4: 100%|██████████| 79/79 [00:33<00:00,  2.35batch/s,
accuracy=53.4, loss=1.04]


LR=0.15, WD=0.0
```

```
Epoch 0: 100%|██████████| 79/79 [00:34<00:00,  2.28batch/s,
accuracy=36.7, loss=1.64]
Epoch 1: 100%|██████████| 79/79 [00:33<00:00,  2.38batch/s,
accuracy=45.1, loss=1.3]
Epoch 2: 100%|██████████| 79/79 [00:32<00:00,  2.43batch/s,
accuracy=50.6, loss=1.14]
Epoch 3: 100%|██████████| 79/79 [00:32<00:00,  2.43batch/s,
accuracy=51.9, loss=1.07]
Epoch 4: 100%|██████████| 79/79 [00:32<00:00,  2.43batch/s,
accuracy=52.9, loss=1.04]
```

LR=0.2, WD=0.0001

```
Epoch 0: 100%|██████████| 79/79 [00:34<00:00,  2.31batch/s,
accuracy=37.5, loss=1.6]
Epoch 1: 100%|██████████| 79/79 [00:33<00:00,  2.39batch/s,
accuracy=47, loss=1.22]
Epoch 2: 100%|██████████| 79/79 [00:33<00:00,  2.37batch/s,
accuracy=51.2, loss=1.08]
Epoch 3: 100%|██████████| 79/79 [00:32<00:00,  2.42batch/s,
accuracy=52.7, loss=1.05]
Epoch 4: 100%|██████████| 79/79 [00:32<00:00,  2.44batch/s,
accuracy=53.6, loss=1.03]
```

LR=0.2, WD=1e-05

```
Epoch 0: 100%|██████████| 79/79 [00:32<00:00,  2.43batch/s,
accuracy=38.9, loss=1.58]
Epoch 1: 100%|██████████| 79/79 [00:34<00:00,  2.30batch/s,
accuracy=46.2, loss=1.25]
Epoch 2: 100%|██████████| 79/79 [00:33<00:00,  2.39batch/s,
accuracy=51.5, loss=1.1]
Epoch 3: 100%|██████████| 79/79 [00:33<00:00,  2.36batch/s,
accuracy=54.4, loss=1.04]
Epoch 4: 100%|██████████| 79/79 [00:38<00:00,  2.03batch/s,
accuracy=57.4, loss=1.01]
```

LR=0.2, WD=0.0

```
Epoch 0: 100%|██████████| 79/79 [00:32<00:00,  2.42batch/s,
accuracy=38.4, loss=1.6]
Epoch 1: 100%|██████████| 79/79 [00:34<00:00,  2.29batch/s,
accuracy=46.7, loss=1.24]
Epoch 2: 100%|██████████| 79/79 [00:33<00:00,  2.35batch/s,
accuracy=51.1, loss=1.09]
Epoch 3: 100%|██████████| 79/79 [00:33<00:00,  2.39batch/s,
accuracy=53.2, loss=1.05]
```

```
Epoch 4: 100%|██████████| 79/79 [00:32<00:00,  2.42batch/s,
accuracy=54.2, loss=1.02]
```

```python
model = RNNModel(nn.LSTM, 9, 128, 3, False, 6).to(device)

lr = 0.02
wd = 1e-4
optimizer = optim.SGD(model.parameters(), lr=lr, weight_decay=wd,
momentum=0.9)

loss_fn = nn.CrossEntropyLoss()

loss_train_hist = []
loss_valid_hist = []

acc_train_hist = []
acc_valid_hist = []

best_loss_valid = torch.inf
epoch_counter = 0

num_epochs = 80

for epoch in range(num_epochs):
  # Train
  model, loss_train, acc_train = train_one_epoch(model,
                                                 train_loader,
                                                 loss_fn,
                                                 optimizer,
                                                 epoch)
  # Validation
  loss_valid, acc_valid = validation(model,
                                     test_loader,
                                     loss_fn)

  loss_train_hist.append(loss_train)
  loss_valid_hist.append(loss_valid)

  acc_train_hist.append(acc_train)
  acc_valid_hist.append(acc_valid)

  print(f'Valid: Loss = {loss_valid:.4}, Acc = {acc_valid:.4}')

  if loss_valid < best_loss_valid:
    torch.save(model, 'model.pt')
    best_loss_valid = loss_valid
    print('Model Saved!')
```

```
  print()
  epoch_counter += 1
```

```
Epoch 0: 100%|██████████| 79/79 [00:54<00:00,  1.44batch/s,
accuracy=18.3, loss=1.79]

Valid: Loss = 1.786, Acc = 0.1909
Model Saved!


Epoch 1: 100%|██████████| 79/79 [00:55<00:00,  1.41batch/s,
accuracy=19.7, loss=1.78]

Valid: Loss = 1.777, Acc = 0.3835
Model Saved!


Epoch 2: 100%|██████████| 79/79 [00:55<00:00,  1.41batch/s,
accuracy=32.4, loss=1.74]

Valid: Loss = 1.597, Acc = 0.4239
Model Saved!


Epoch 3: 100%|██████████| 79/79 [00:56<00:00,  1.40batch/s,
accuracy=39.1, loss=1.36]

Valid: Loss = 1.285, Acc = 0.3784
Model Saved!


Epoch 4: 100%|██████████| 79/79 [00:54<00:00,  1.45batch/s,
accuracy=44.3, loss=1.21]

Valid: Loss = 1.151, Acc = 0.4515
Model Saved!


Epoch 5: 100%|██████████| 79/79 [00:54<00:00,  1.45batch/s,
accuracy=47.6, loss=1.12]

Valid: Loss = 1.115, Acc = 0.4864
Model Saved!


Epoch 6: 100%|██████████| 79/79 [00:57<00:00,  1.38batch/s,
accuracy=49.1, loss=1.1]

Valid: Loss = 1.093, Acc = 0.4566
Model Saved!
```

```
Epoch 7: 100%|██████████| 79/79 [00:55<00:00,  1.41batch/s,
accuracy=49.9, loss=1.07]

Valid: Loss = 1.078, Acc = 0.477
Model Saved!


Epoch 8: 100%|██████████| 79/79 [00:56<00:00,  1.40batch/s,
accuracy=50.4, loss=1.08]

Valid: Loss = 1.079, Acc = 0.4928


Epoch 9: 100%|██████████| 79/79 [00:58<00:00,  1.36batch/s,
accuracy=49.3, loss=1.07]

Valid: Loss = 1.015, Acc = 0.5234
Model Saved!


Epoch 10: 100%|██████████| 79/79 [00:56<00:00,  1.41batch/s,
accuracy=52.5, loss=1.03]

Valid: Loss = 1.002, Acc = 0.5174
Model Saved!


Epoch 11: 100%|██████████| 79/79 [00:55<00:00,  1.43batch/s,
accuracy=54.7, loss=0.99]

Valid: Loss = 0.9795, Acc = 0.5595
Model Saved!


Epoch 12: 100%|██████████| 79/79 [00:56<00:00,  1.39batch/s,
accuracy=62, loss=0.864]

Valid: Loss = 0.8623, Acc = 0.591
Model Saved!


Epoch 13: 100%|██████████| 79/79 [00:55<00:00,  1.42batch/s,
accuracy=65.8, loss=0.742]

Valid: Loss = 0.6985, Acc = 0.733
Model Saved!


Epoch 14: 100%|██████████| 79/79 [00:56<00:00,  1.41batch/s,
accuracy=70.6, loss=0.664]
```

```
Valid: Loss = 0.5857, Acc = 0.7415
Model Saved!


Epoch 15: 100%|██████████| 79/79 [00:58<00:00,  1.36batch/s,
accuracy=73.9, loss=0.598]

Valid: Loss = 0.5438, Acc = 0.7844
Model Saved!


Epoch 16: 100%|██████████| 79/79 [00:56<00:00,  1.41batch/s,
accuracy=75.3, loss=0.578]

Valid: Loss = 0.5547, Acc = 0.7577


Epoch 17: 100%|██████████| 79/79 [00:57<00:00,  1.36batch/s,
accuracy=75, loss=0.544]

Valid: Loss = 0.5418, Acc = 0.7304
Model Saved!


Epoch 18: 100%|██████████| 79/79 [00:54<00:00,  1.46batch/s,
accuracy=76.5, loss=0.515]

Valid: Loss = 0.4703, Acc = 0.7823
Model Saved!


Epoch 19: 100%|██████████| 79/79 [00:54<00:00,  1.44batch/s,
accuracy=79.1, loss=0.476]

Valid: Loss = 0.4424, Acc = 0.8265
Model Saved!


Epoch 20: 100%|██████████| 79/79 [00:56<00:00,  1.40batch/s,
accuracy=78.8, loss=0.482]

Valid: Loss = 0.4426, Acc = 0.8027


Epoch 21: 100%|██████████| 79/79 [00:55<00:00,  1.41batch/s,
accuracy=80.7, loss=0.438]

Valid: Loss = 0.4545, Acc = 0.7942


Epoch 22: 100%|██████████| 79/79 [00:56<00:00,  1.40batch/s,
accuracy=82.2, loss=0.428]
```

```
Valid: Loss = 0.3857, Acc = 0.8274
Model Saved!


Epoch 23: 100%|██████████| 79/79 [00:58<00:00,  1.36batch/s,
accuracy=82.1, loss=0.441]

Valid: Loss = 0.3903, Acc = 0.824


Epoch 24: 100%|██████████| 79/79 [00:55<00:00,  1.42batch/s,
accuracy=85.4, loss=0.378]

Valid: Loss = 0.4659, Acc = 0.8448


Epoch 25: 100%|██████████| 79/79 [00:54<00:00,  1.44batch/s,
accuracy=87.1, loss=0.351]

Valid: Loss = 0.3213, Acc = 0.8844
Model Saved!


Epoch 26: 100%|██████████| 79/79 [00:57<00:00,  1.38batch/s,
accuracy=87.7, loss=0.341]

Valid: Loss = 0.3436, Acc = 0.8895


Epoch 27: 100%|██████████| 79/79 [00:56<00:00,  1.40batch/s,
accuracy=88.3, loss=0.331]

Valid: Loss = 0.3126, Acc = 0.8754
Model Saved!


Epoch 28: 100%|██████████| 79/79 [00:56<00:00,  1.41batch/s,
accuracy=88.6, loss=0.332]

Valid: Loss = 0.3356, Acc = 0.8682


Epoch 29: 100%|██████████| 79/79 [00:57<00:00,  1.36batch/s,
accuracy=90.2, loss=0.292]

Valid: Loss = 0.2935, Acc = 0.8992
Model Saved!


Epoch 30: 100%|██████████| 79/79 [00:55<00:00,  1.43batch/s,
accuracy=91.8, loss=0.262]
```

```
Valid: Loss = 0.25, Acc = 0.9128
Model Saved!


Epoch 31: 100%|██████████| 79/79 [00:54<00:00,  1.45batch/s,
accuracy=91.3, loss=0.253]

Valid: Loss = 0.2413, Acc = 0.9082
Model Saved!


Epoch 32: 100%|██████████| 79/79 [00:54<00:00,  1.46batch/s,
accuracy=91.5, loss=0.26]

Valid: Loss = 0.2387, Acc = 0.9137
Model Saved!


Epoch 33: 100%|██████████| 79/79 [00:55<00:00,  1.43batch/s,
accuracy=92.1, loss=0.233]

Valid: Loss = 0.335, Acc = 0.872


Epoch 34: 100%|██████████| 79/79 [00:57<00:00,  1.37batch/s,
accuracy=91.9, loss=0.242]

Valid: Loss = 0.1882, Acc = 0.9303
Model Saved!


Epoch 35: 100%|██████████| 79/79 [00:56<00:00,  1.41batch/s,
accuracy=92.4, loss=0.221]

Valid: Loss = 0.2331, Acc = 0.9137


Epoch 36: 100%|██████████| 79/79 [00:56<00:00,  1.41batch/s,
accuracy=92.8, loss=0.222]

Valid: Loss = 0.1932, Acc = 0.9252


Epoch 37: 100%|██████████| 79/79 [00:56<00:00,  1.39batch/s,
accuracy=92.4, loss=0.218]

Valid: Loss = 0.1935, Acc = 0.9175


Epoch 38: 100%|██████████| 79/79 [00:54<00:00,  1.45batch/s,
accuracy=92.4, loss=0.228]
```

```
Valid: Loss = 0.1834, Acc = 0.9392
Model Saved!


Epoch 39: 100%|██████████| 79/79 [00:54<00:00,  1.44batch/s,
accuracy=93.2, loss=0.193]

Valid: Loss = 0.1968, Acc = 0.9396


Epoch 40: 100%|██████████| 79/79 [00:57<00:00,  1.37batch/s,
accuracy=92, loss=0.229]

Valid: Loss = 0.2598, Acc = 0.9014


Epoch 41: 100%|██████████| 79/79 [00:55<00:00,  1.41batch/s,
accuracy=92.7, loss=0.213]

Valid: Loss = 0.2231, Acc = 0.909


Epoch 42: 100%|██████████| 79/79 [00:55<00:00,  1.42batch/s,
accuracy=93.1, loss=0.21]

Valid: Loss = 0.1759, Acc = 0.9345
Model Saved!


Epoch 43: 100%|██████████| 79/79 [00:56<00:00,  1.39batch/s,
accuracy=93.5, loss=0.183]

Valid: Loss = 0.1724, Acc = 0.9384
Model Saved!


Epoch 44: 100%|██████████| 79/79 [00:54<00:00,  1.46batch/s,
accuracy=93.6, loss=0.181]

Valid: Loss = 0.2088, Acc = 0.9162


Epoch 45: 100%|██████████| 79/79 [00:54<00:00,  1.46batch/s,
accuracy=92.2, loss=0.208]

Valid: Loss = 0.2287, Acc = 0.9167


Epoch 46: 100%|██████████| 79/79 [00:56<00:00,  1.39batch/s,
accuracy=93.2, loss=0.179]

Valid: Loss = 0.1517, Acc = 0.9481
Model Saved!
```

```
Epoch 47: 100%|██████████| 79/79 [00:55<00:00,  1.42batch/s,
accuracy=93.1, loss=0.182]

Valid: Loss = 0.1998, Acc = 0.9188


Epoch 48: 100%|██████████| 79/79 [00:56<00:00,  1.40batch/s,
accuracy=93.2, loss=0.197]

Valid: Loss = 0.191, Acc = 0.9247


Epoch 49: 100%|██████████| 79/79 [00:55<00:00,  1.41batch/s,
accuracy=93.1, loss=0.181]

Valid: Loss = 0.1679, Acc = 0.9409


Epoch 50: 100%|██████████| 79/79 [00:54<00:00,  1.44batch/s,
accuracy=94, loss=0.169]

Valid: Loss = 0.1541, Acc = 0.9413


Epoch 51: 100%|██████████| 79/79 [00:56<00:00,  1.40batch/s,
accuracy=93.5, loss=0.184]

Valid: Loss = 0.1993, Acc = 0.9222


Epoch 52: 100%|██████████| 79/79 [00:54<00:00,  1.46batch/s,
accuracy=94, loss=0.168]

Valid: Loss = 0.1909, Acc = 0.9269


Epoch 53: 100%|██████████| 79/79 [00:54<00:00,  1.46batch/s,
accuracy=93.5, loss=0.177]

Valid: Loss = 0.1703, Acc = 0.9307


Epoch 54: 100%|██████████| 79/79 [00:57<00:00,  1.38batch/s,
accuracy=93.8, loss=0.176]

Valid: Loss = 0.1544, Acc = 0.9358


Epoch 55: 100%|██████████| 79/79 [00:55<00:00,  1.42batch/s,
accuracy=93, loss=0.191]

Valid: Loss = 0.1539, Acc = 0.946
```

```
Epoch 56: 100%|██████████| 79/79 [00:55<00:00,  1.42batch/s,
accuracy=94.2, loss=0.159]

Valid: Loss = 0.1829, Acc = 0.9435


Epoch 57: 100%|██████████| 79/79 [00:57<00:00,  1.37batch/s,
accuracy=93.5, loss=0.185]

Valid: Loss = 0.2615, Acc = 0.9099


Epoch 58: 100%|██████████| 79/79 [00:54<00:00,  1.46batch/s,
accuracy=93.8, loss=0.166]

Valid: Loss = 0.151, Acc = 0.9371
Model Saved!


Epoch 59: 100%|██████████| 79/79 [00:54<00:00,  1.46batch/s,
accuracy=94.2, loss=0.158]

Valid: Loss = 0.1755, Acc = 0.9307


Epoch 60: 100%|██████████| 79/79 [00:56<00:00,  1.41batch/s,
accuracy=93.1, loss=0.183]

Valid: Loss = 0.1879, Acc = 0.9311


Epoch 61: 100%|██████████| 79/79 [00:55<00:00,  1.42batch/s,
accuracy=93.8, loss=0.166]

Valid: Loss = 0.1613, Acc = 0.9447


Epoch 62: 100%|██████████| 79/79 [01:01<00:00,  1.29batch/s,
accuracy=94.1, loss=0.152]

Valid: Loss = 0.1433, Acc = 0.9384
Model Saved!


Epoch 63: 100%|██████████| 79/79 [01:00<00:00,  1.31batch/s,
accuracy=94.2, loss=0.156]

Valid: Loss = 0.1423, Acc = 0.9384
Model Saved!


Epoch 64: 100%|██████████| 79/79 [00:58<00:00,  1.35batch/s,
accuracy=94.5, loss=0.153]
```

```
Valid: Loss = 0.1616, Acc = 0.9464


Epoch 65: 100%|██████████| 79/79 [00:59<00:00,  1.33batch/s,
accuracy=94.3, loss=0.155]

Valid: Loss = 0.1694, Acc = 0.9328


Epoch 66: 100%|██████████| 79/79 [00:58<00:00,  1.34batch/s,
accuracy=93.7, loss=0.175]

Valid: Loss = 0.1439, Acc = 0.9396


Epoch 67: 100%|██████████| 79/79 [00:58<00:00,  1.35batch/s,
accuracy=94.3, loss=0.148]

Valid: Loss = 0.1626, Acc = 0.9366


Epoch 68: 100%|██████████| 79/79 [00:59<00:00,  1.33batch/s,
accuracy=94.6, loss=0.151]

Valid: Loss = 0.2374, Acc = 0.9188


Epoch 69: 100%|██████████| 79/79 [00:54<00:00,  1.45batch/s,
accuracy=94.2, loss=0.155]

Valid: Loss = 0.1417, Acc = 0.9413
Model Saved!


Epoch 70: 100%|██████████| 79/79 [00:54<00:00,  1.46batch/s,
accuracy=94.9, loss=0.143]

Valid: Loss = 0.1349, Acc = 0.9511
Model Saved!


Epoch 71: 100%|██████████| 79/79 [00:55<00:00,  1.42batch/s,
accuracy=94.8, loss=0.14]

Valid: Loss = 0.1736, Acc = 0.9281


Epoch 72: 100%|██████████| 79/79 [00:55<00:00,  1.42batch/s,
accuracy=94.2, loss=0.156]

Valid: Loss = 0.16, Acc = 0.9439
```

```
Epoch 73: 100%|██████████| 79/79 [00:57<00:00,  1.37batch/s,
accuracy=94.7, loss=0.142]

Valid: Loss = 0.1353, Acc = 0.9537


Epoch 74: 100%|██████████| 79/79 [00:55<00:00,  1.42batch/s,
accuracy=94.4, loss=0.144]

Valid: Loss = 0.155, Acc = 0.9324


Epoch 75: 100%|██████████| 79/79 [00:55<00:00,  1.42batch/s,
accuracy=94.3, loss=0.151]

Valid: Loss = 0.1503, Acc = 0.9413


Epoch 76: 100%|██████████| 79/79 [00:56<00:00,  1.39batch/s,
accuracy=94.5, loss=0.142]

Valid: Loss = 0.1427, Acc = 0.9413


Epoch 77: 100%|██████████| 79/79 [00:53<00:00,  1.47batch/s,
accuracy=95.2, loss=0.128]

Valid: Loss = 0.1271, Acc = 0.9532
Model Saved!


Epoch 78: 100%|██████████| 79/79 [00:54<00:00,  1.46batch/s,
accuracy=94.8, loss=0.133]

Valid: Loss = 0.1214, Acc = 0.949
Model Saved!


Epoch 79: 100%|██████████| 79/79 [00:57<00:00,  1.38batch/s,
accuracy=94.8, loss=0.134]

Valid: Loss = 0.1209, Acc = 0.9473
Model Saved!
```

Plot

```
plt.plot(range(epoch_counter), loss_train_hist, 'r-', label='Train')
plt.plot(range(epoch_counter), loss_valid_hist, 'b-',
label='Validation')
```

```
plt.xlabel('Epoch')
plt.ylabel('loss')
plt.grid(True)
plt.legend()
```

```
<matplotlib.legend.Legend at 0x7edd8323ad70>
```

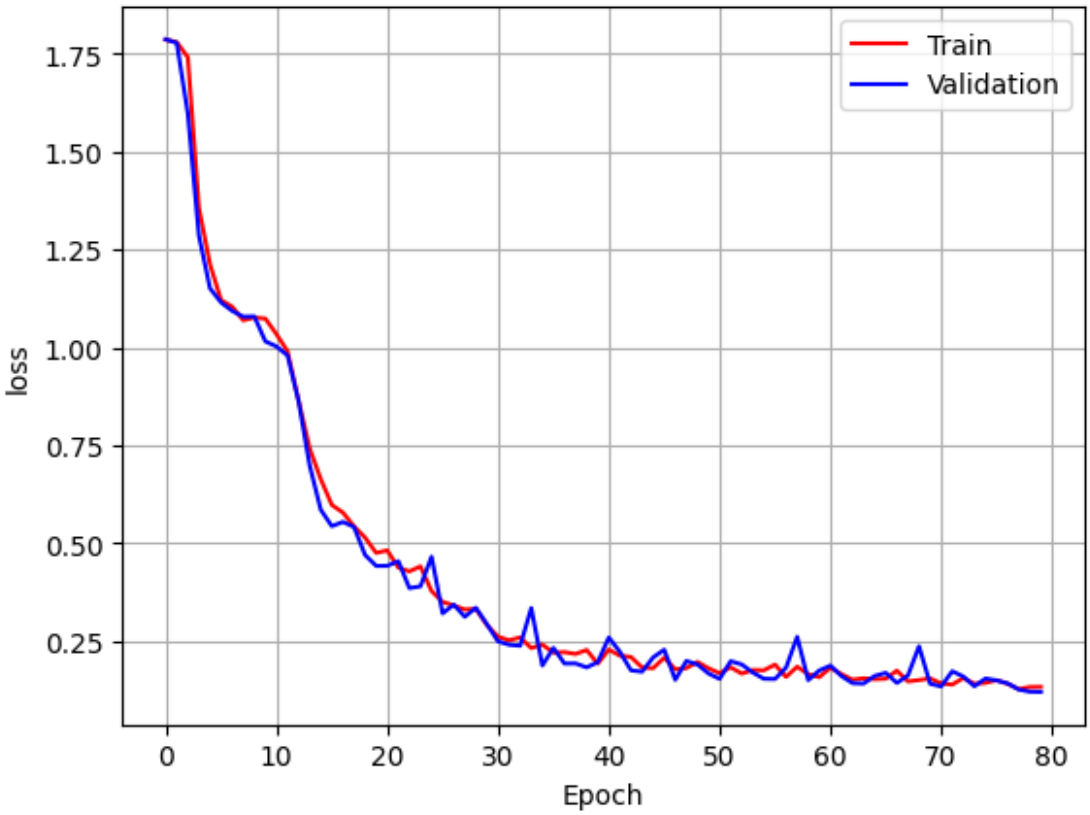


```
plt.plot(range(epoch_counter), acc_train_hist, 'r-', label='Train')
plt.plot(range(epoch_counter), acc_valid_hist, 'b-',
label='Validation')

plt.xlabel('Epoch')
plt.ylabel('Acc')
plt.grid(True)
plt.legend()
```

```
<matplotlib.legend.Legend at 0x7edd8323ab30>
```

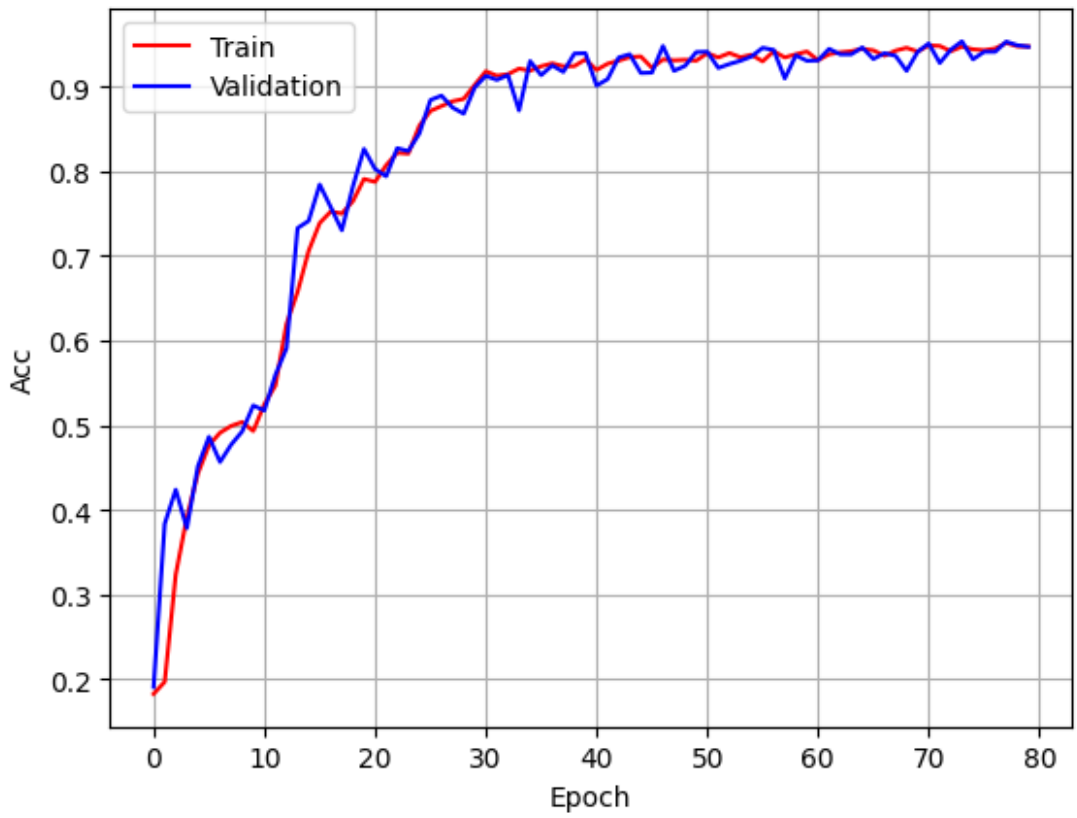
Train
Validation
Acc
Epoch
0.2
0.3
0.4
0.5
0.6
0.7
0.8
0.9
0
10
20
30
40
50
60
70
80